speedy M60 INSTRUCTIONS

TIENDA DEL ARQUITECTO

SbyC A RAINBOW IN GLASS COMPETENCE

WWW.SBYC.IT

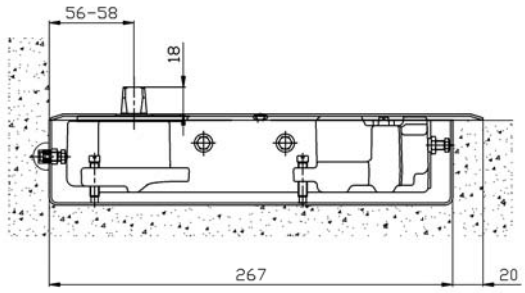

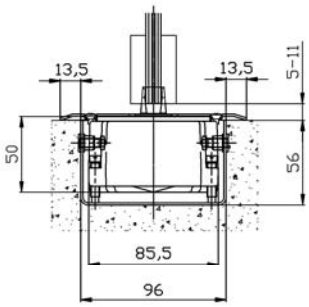

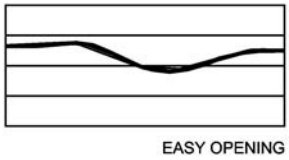

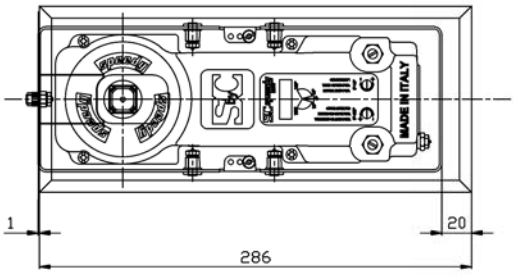

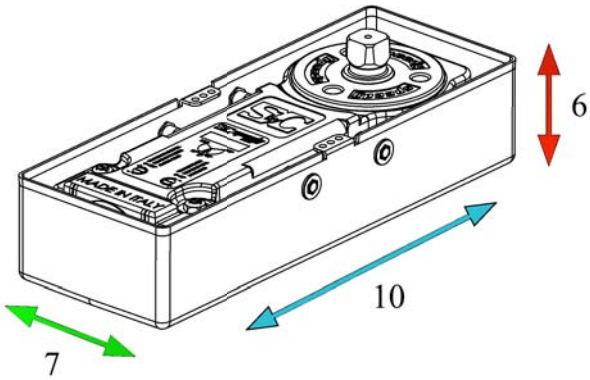

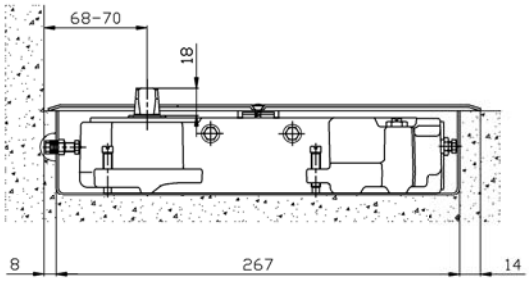

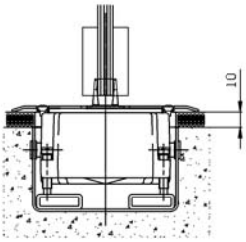

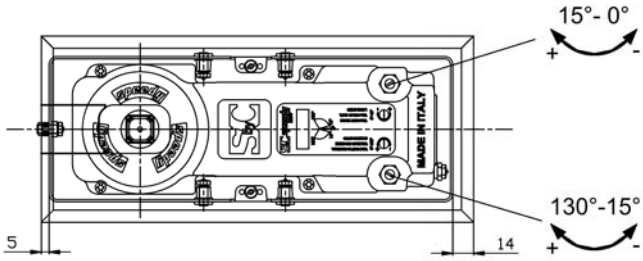

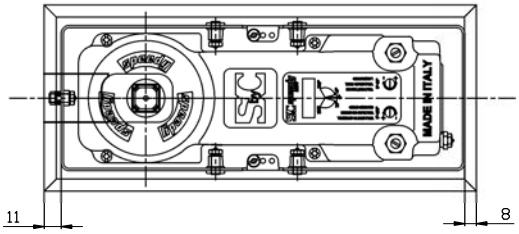

Fermo costante
Costant hold-open
Retenciòn costante

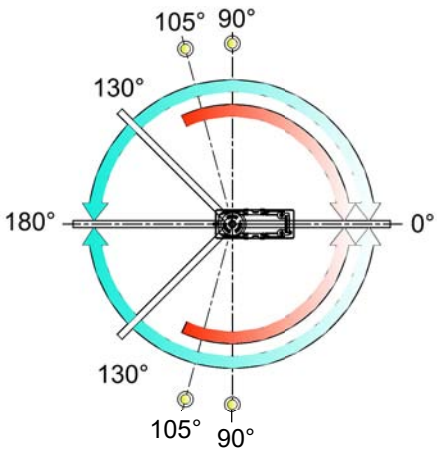

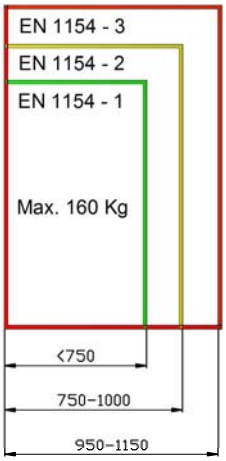

SPEEDYBYCASMA SRL

PH +39 02 97298418 +39 02 87188746 – WWW.SBYC.IT – INFO@SBYC.IT

speedy

M60

INSTRUCTIONS

TIENDA DEL ARQUITECTO

SbyC A RAINBOW IN GLASS COMPETENCE

WWW.SBYC.IT

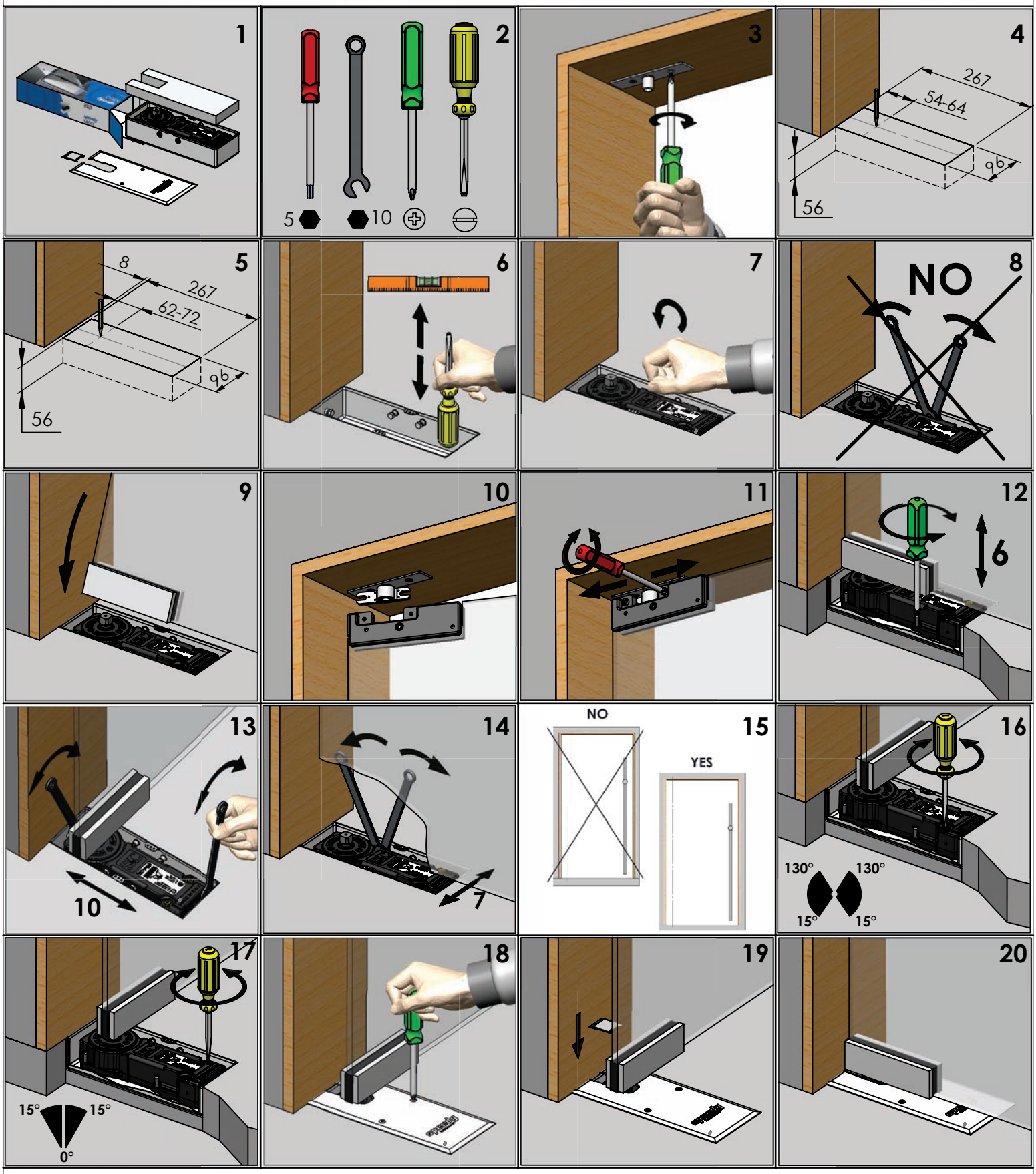

SPEEDYBYCASMA SRL

Tel. +39 02 97298418 +39 02 87188746 - WWW.SBYC.IT - INFO@SBYC.IT